ALLPPT.com

JÖNKÖPING UNIVERSITY

IT Service Management (ITSM)

2025

Agenda

01 **Service or products?**

02 **Service Dominant Logic**

03 **Foundational Premises?**

What is theory?

Products
Services

Grand Challenges (GC)

GC is a fundamental scientific discovery, leading to major changes and get big impact“

- There must be a fundamental problem
- Man should be able to solve the problem within one (or two) generations
- Evidence of the contrary does not need to exist
- Broad areas of great social and economic relevance
- Initially, it is often sufficient to specify the challenge and problem

(UN 2015)

Examples of Grand Challenges

Generic Grand Challenges, UN (2000)

- eradicate extreme poverty and hunger
- Achieve universal primary education
- promote gender equality and empower women
- Reduce child mortality
- Improve maternal health
- Combat Aids, malaria etc.
- Ensure environmental sustainability

Specific IT-related Grand Challenges

- Integrate human-machine problem solving
- Overcoming communication barriers in inter-company integration
  - Switch to the service paradigm

Swedish voices about Service

- "Services are intangible"
- “A service ... that is what customers see. That is, the IT system"
- "IT service is when calling to the IT-department"
- "Services are heterogeneous"
- "IT services deliver value to customers without the customers need to own and be accountable for the risks that this entails"
- "Services are produced and consumed at the same time"
- "We do not work with IT services only with e-services"
- "Services are not storable“
- …

…However, the voices above could be viewed as incorrect - why?

The traditional view of service

Services has traditionally been defined with different characteristics. A service view , according to Goods Dominant Logic, holds that:

- services are intangible
- services are heterogeneous
- services are produced and consumed simultaneously
- services can not be kept in stock

e.g. Zeithaml et al. 1985

Is this view incorrect?

Service has traditionally been defined with different characteristics. A service is:

- Services ar
- Services are p d consumed simultaneously
- Services can n n stock
- Services are gib

e.g. Zeithaml et al. 1985

Traditional view of differences between Services and Physical Goods

Physical Goods	Services
• Tangible	• Intangible
• Homogeneous	• Heterogeneous
• Production and distribution separated from consumption	• Production and distribution and consumption simultaneous processes
• A thing	An activity or process
Core value produced in factory	Core value produced in buyer-seller interactions
Customers do not (normally) participate in the production process	Customer participate in production
Can be kept in stock	★ Cannot be kept in stock
Transfer of ownership	★ No transfer of ownership

Based on Grönroos: Service Management and Marketing, Lexington Books 1990. Table 2-1.

Goods Dominant Logic

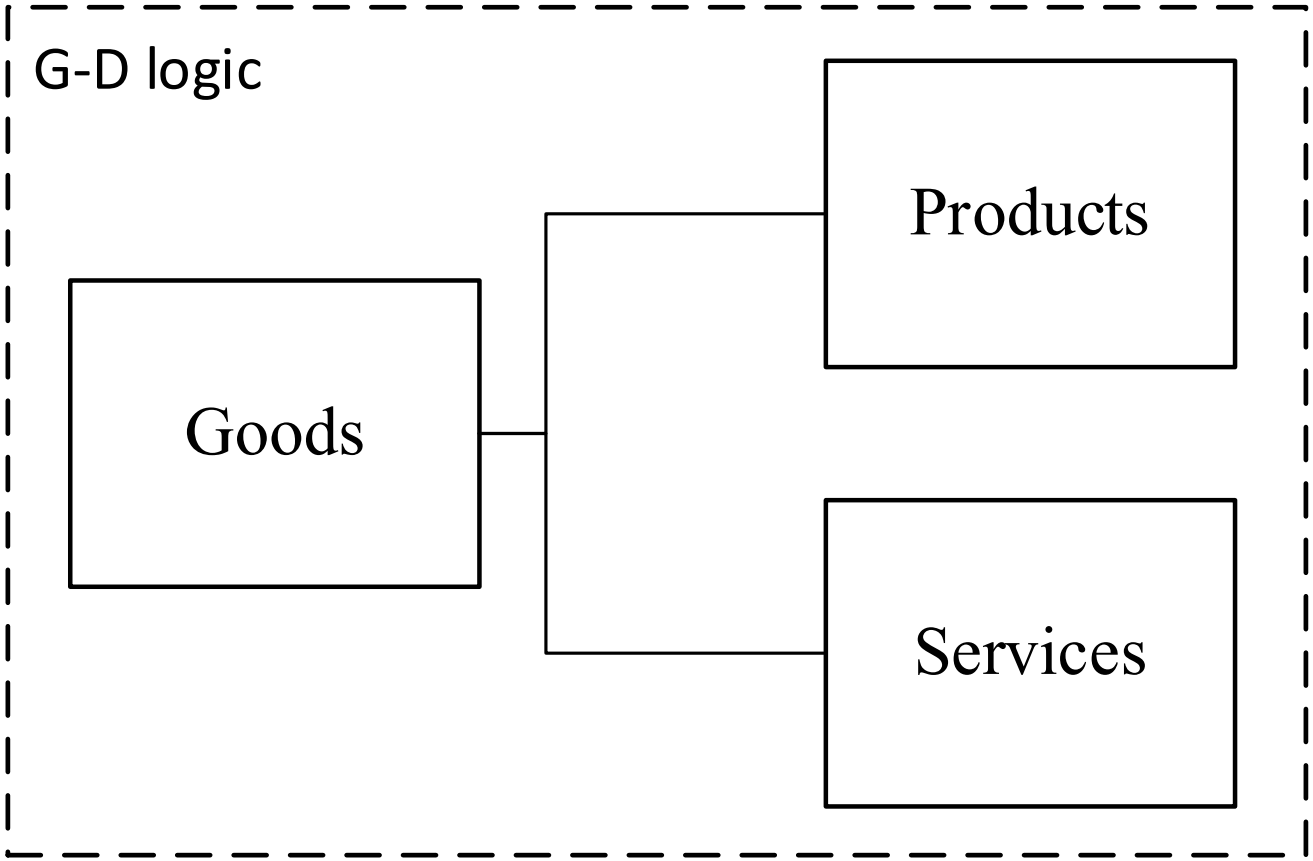

What is the problem with GDL?

What are the problems with the traditional view on service?

- It is not products and/or goods that customers primarily buy – we buy value
- Services are viewed upon as add-ons (to a product) => less desirable
- “Customer orientation” is also an add-on.
- Customer is viewed upon as a value destroyer!
- one ”builds in” value into a product.
- The claimed difference between service and product
- …

A transition to service

From a G-D logic perspective services are (only) value enhancing add-ons for goods or a particular type of goods that is characterized by intangibility, heterogeneity (non-standardization), inseparability (of production and consumption) and perishability (Vargo and Lusch 2009a)

Researchers agree that its time to scrap this old service view (Gummesson 2006)

GOODS

SERVICES

(Gummesson, 2006)

Service(s)

From…

The main characteristics of **services** are often mentioned: **Services** are considered to be **intangible** (**immaterial**), **inseparable** (in production and consumption), **heterogenous** (i.e. instantial variance) and **perishable** (i.e. having **no** separate and lasting evidence – cant be stored)

to…

Grönroos (2000, p. 48) defines services as "processes consisting of a series of activities where a number of different types of resources are used in direct interaction with a customer, so that a solution is found to a customer's problem…

The solution

SERVICE AS AN **OBJECT** OR SERVICE AS A **PERSPECTIVE**

- Services are heterogeneous
- Services are produced and consumed simultaneously
- Services can not be kept in stock
- Services are intangible

- **Value propositions**
- **Actors**
- **Resources**
- **Institutions: e.g., Tools, processes, and methods**
- **Institutional arrangements : Norms, rules, and laws**

Service Dominant Logic (Vargo and Lusch 2004)

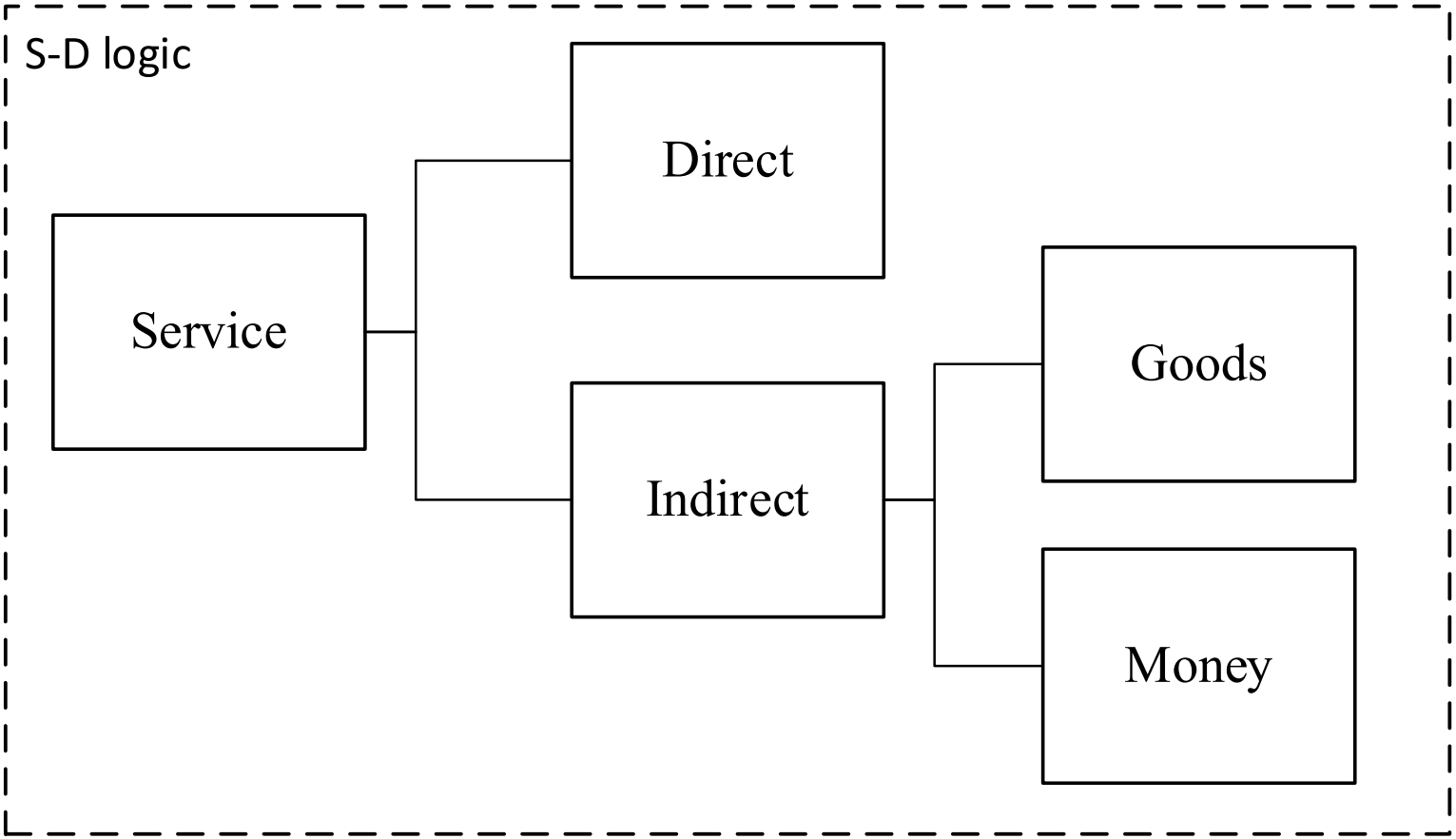

Definition of Service(s)

"Service is an interactive process of 'doing something for someone' that is valued. Service is the application of specialized competences (operant resources – knowledge and skills), through deeds, processes, and performances for the benefit of another entity or the entity itself."
(Vargo & Lusch, 2008a, p. 26)

Servic***es*** to Service**(s)**

GOODS/PRODUCTS + (old term) SERVIC*E**S** in plural*

=

SERVICE VIEW

ITIL4: view of service & product

- *"A service is a means of enabling value co-creation, by facilitating **outcomes** that customers want to achieve, without the customer having to manage specific **costs** and **risks**."*
- A service provider organisation produces outputs, which help its consumers to achieve their desired outcomes. This is where co-creation is important; without input or activity from the consumer, no value is created.
- *"An output is a tangible or intangible deliverable of an activity."*
- *"An outcome is a result for a stakeholder enabled by one or more outputs."*
- Cost is *"the amount of money spent on a specific activity or resource."*
- Risk is *"a possible event that could cause harm or loss or make it difficult to achieve objectives. Risk can also be defined as uncertainty of outcome and can be used in the context of measuring the probability of positive outcomes as well as negative outcomes."*
- *A product is a configuration of an organization's resources designed to offer value for a consumer.*

Foundational Premises (FP)

VARGO AND LUSCH

FP1: Service is the fundamental basis of exchange

According Vargo and Lusch (2009) the first FP is central for S-D logic.

- "Service is the application of knowledge and skills (operant resources) why service is exchanged for service in a reciprocal manner."

FP2: Indirect exchange masks the fundamental basis of exchange

The indirect exchange referred to in FP2 are the combination of goods, money and institutions that usually are used to exchange the service (Vargo and Lusch 2004a). These “parts” of the service sometimes hide the real exchange of knowledge and skills.

FP3: Goods are a distribution mechanism for service provision

In S-D logic, the importance of goods **does not vanish** because once service is understood as the basis of all exchange, goods can **be seen as vehicles or transmitters** of competences for service provision (Vargo and Lusch 2009).

Goods derive their value through use – the service they provide (Vargo and Lusch 2008b).

FP4: Operant resources are the fundamental source of strategic benefit.

Vargo and Lusch (2009) suggests that one of the most central and critical differences between S-D logic and G-D logic is the shift in emphasis from operand to operant resources.

Operand resources are those which must be acted upon before benefit can be realized, whereas **operant resources are those which can cause effects** (ibid). Operand resources are usually tangible and static, whereas operant resources are usually intangible and dynamic (ibid). As the name implies, G-D logic is centered on operand resources, whereas S-D logic refocuses exchange on operant resources by shifting from units of output to value-creation processes as the purpose of exchange.

FP5: All economies are service economies.

The common perception is that developed countries are in the middle of a 'new service economy' (Vargo and Lusch 2009). This is however a G-D logic view on service economy because of the separation of goods and services. However, from an S-D logic perspective, service provision is neither just now becoming abundant nor only recently gaining importance, but rather is the basis of all economic exchange (ibid). Hence, In S-D logic, there is no 'service revolution'; there is a revelation in service-centered thinking (ibid).

FP6: Value is cocreated by multiple actors, always including the beneficiary.

Vargo and Lusch (2009) assert that value creation occurs at the intersection of activities of service providers and service beneficiaries and is always determined by the beneficiary which implies the application of the customer's operant resources to those applied by the provider.

FP7: Actors cannot deliver value but can participate in the creation and offering of value propositions.

Because of the collaborative nature of value creation and the role of the customer in value determination, contextually and through use, the firm can initially only make value propositions, and then participate in its co-creation, if that proposition is accepted (Vargo and Lusch 2009).

A value proposition has often been presented as a promise/invitation to co-create value (c.f. Vargo and Lusch 2009; Toivonen and Touminen 2009; Skålén et al. 2015).

FP8: A service-centered view is inherently beneficiary oriented and relational.

In G-D logic, the firm and the customer are separate, with the former seen as a producer of value and the latter as a destroyer; whereas, in S-D logic, value creation is an interactive and collaborative process and, thus, value creation is always relational (Vargo and Lusch 2009). Customer centricity or, more precisely, mutual centricity and relationships are not options; they are realities of value-creating processes (ibid).

FP9: All social and economic actors are resource integrators.

The premise that value is co-created, implies that value is determined through the integration of both provider-supplied and beneficiary supplied resources (always operant and sometimes operand). However, these resources, in turn, come from various sources – that is, other market-facing, public and private sources. In the traditional G-D logic-based literature, this integration is most often captured in concepts of supply chains (or more recently, value networks) and manufacturing (i.e. resource assembly). In the (G-D logic-based) 'services' literature, it is partially captured in the observation of the heterogeneity of services. S-D logic extends the manufacturing logic from making things to integrating resources to create densities (ibid).

Resource Density = "the best combination of resources is mobilized for a particular situation"

FP10: Value is always uniquely and phenomenologically determined by the beneficiary.

The tenth foundational premise was added (Vargo and Lusch, 2008a) to the initial FPs to capture more explicitly the experiential nature of value….

FP11: Value cocreation is coordinated through actor-generated institutions and institutional arrangements.

"Just as actors don't exist independently of (social) contexts, institutions don't exist independently of other institutions. However, here too, a conceptual distinction is useful because, institutions work as building blocks for the ongoing formation and reformation of increasingly complex assemblages.

We use "institution" to refer to a relatively isolatable, individual rule (e.g., norm, meaning, symbol, law, practice or organizations)

"institutional arrangements" refer to interrelated sets of institutions that together constitute a relatively coherent assemblage that facilitates coordination of activity in value-cocreating **service ecosystems**."

Foundational Premises

Premise number	Foundational Premise
FP1*	Service is the fundamental basis of exchange.
FP2	Indirect exchange masks the fundamental basis of exchange.
FP3	Goods are a distribution mechanism for service provision.
FP4	Operant resources are the fundamental source of strategic benefit.
FP5	All economies are service economies.
FP6 *	Value is cocreated by multiple actors, always including the beneficiary.
FP7	Actors cannot deliver value but can participate in the creation and offering of value propositions.
FP8	A service-centered view is inherently beneficiary oriented and relational.
FP9 *	All social and economic actors are resource integrators.
FP10 *	Value is always uniquely and phenomenologically determined by the beneficiary.
FP11*	Value cocreation is coordinated through actor-generated institutions and institutional arrangements.

Axioms

Table 2 The axioms of S-D logic

Axiom	Desription
Axiom 1/FP1	Service is the fundamental basis of exchange.
Axiom 2/FP6	Value is cocreated by multiple actors, always including the beneficiary.
Axiom 3/FP9	All social and economic actors are resource integrators.
Axiom4/FP10	Value is always uniquely and phenomenologically determined by the beneficiary.
Axiom 5/FP11	Value cocreation is coordinated through actor-generated institutions and institutional arrangements.

So what?